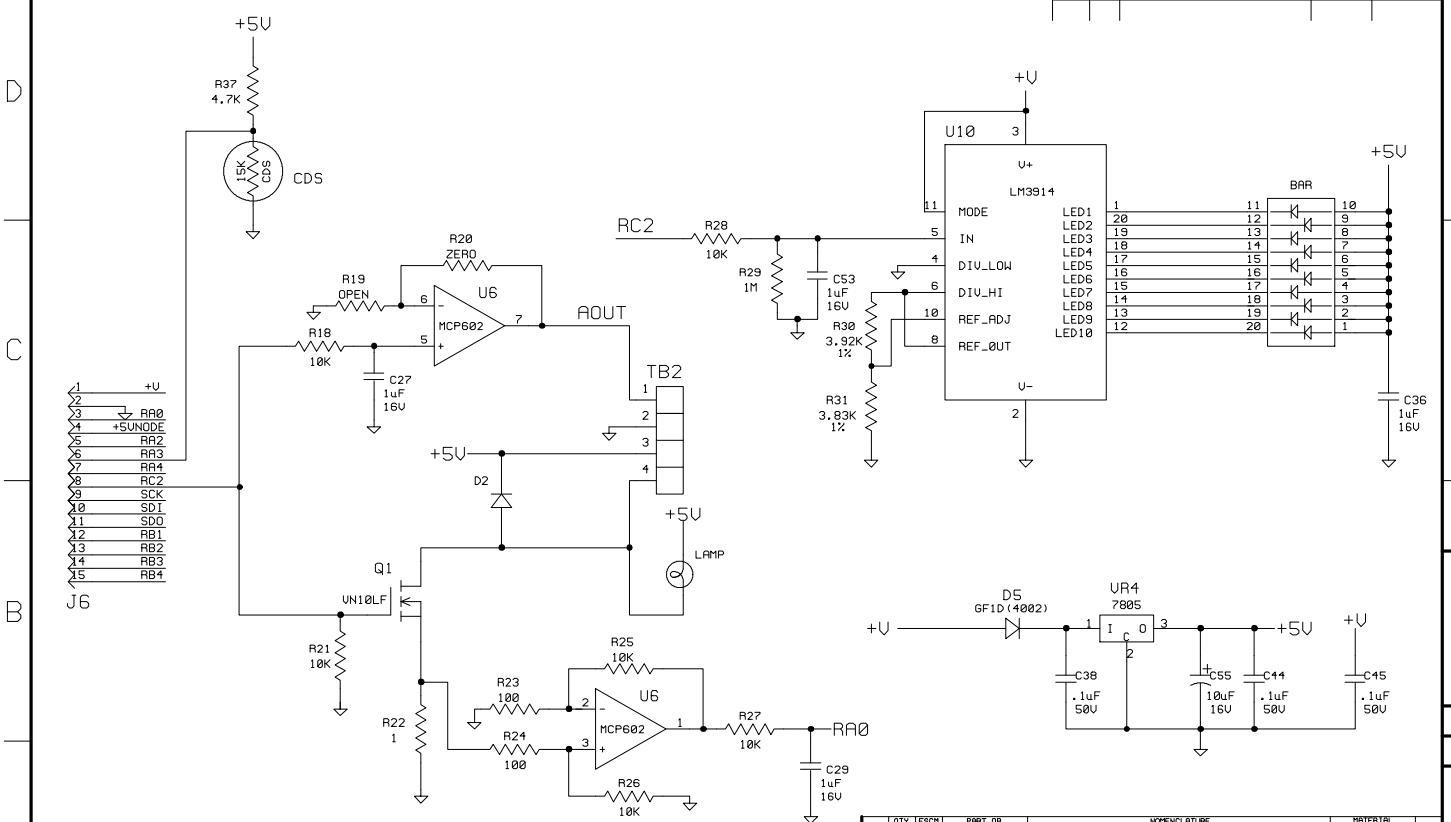

REVISIONS				
ZONE	REV.	DESCRIPTION	DATE	APPROVED

IC	U6	U10				
CAP	C44	C45				
+5V	8					
GND	4	2				
+V		3				

QTY REQD	FSCM NO.	PART OR IDENTIFYING NO.	NOMENCLATURE OR DESCRIPTION	MATERIAL SPECIFICATION

PARTS LIST

UNLESS OTHERWISE SPECIFIED DIMENSIONS ARE IN INCHES TOLERANCES ARE : FRACTIONS DECIMALS ANGLES XX XXX

MATERIAL

FINISH

NEXT ASSY | USED ON

APPLICATION

DO NOT SCALE DRAWING

CONTRACT NO.

APPROVALS		DATE
DRAWN	D ROSS	8/99
CHECKED		
ISSUED		

DIVERSIFIED ENGINEERING & MANUFACTURING, INC.

SCH,CAN-NET ANALOG OUT

SIZE C | FSCM NO. | DWG. NO. 110522 | REV. A

SCALE _ | SHEET 1/1